Int. J. Electrochem. Sci., 3 **(2008)** 346 - 355

International Journal of
ELECTROCHEMICAL
SCIENCE
www.electrochemsci.org

Corrosion Behavior of Titanium and Nickel-based Alloys in HCl and HCl + H_2S Environments

*J. Mendoza-Canales and J. Marín-Cruz**

Instituto Mexicano del Petróleo, Dirección de Investigación y Posgrado, Eje Central Lázaro Cárdenas No. 152, C.P. 07730, D.F., México
*E-mail: jmarin@imp.mx

Received: 5 May 2007 / *Accepted:* 7 January 2008 / *Online published:* 20 January 2008

Titanium grade 2 (UNS[1] R50400), alloy 400 (UNS N04400), alloy 20 (UNS N08020) and alloy C-276 (UNS N10276) were electrochemically explored to determine their corrosion susceptibility behavior when exposed to environments typically found on existent atmospheric column overhead systems in mexican crude oil refineries. Linear anodic polarization was used to attain electrochemical results. Main corrosive species –present in actual overhead systems for a characteristic heavy crude oil produced in Mexico- were reproduced by performing experiments in two distinct electrolytes (0.05 mol/L HCl and 0.05 mol/L HCl + 500 ppm H_2S in aqueous solution) at 40 °C. Metals were examined at pH 1.5, 4, 6, 8 and 10 values for both electrolytes to identify effects of key contaminants. Results revealed that each explored metal exhibits particular corrosion susceptibility depending on pH of environment, suggesting that corrosion susceptibility of every metal is a function of particular metal-environment conditions.

Keywords: atmospheric column, titanium, nickel-based alloys, hydrogen sulfide, overhead corrosion.

1. INTRODUCTION

Atmospheric distillation columns and overhead condensation systems play a key role in refineries because they are primary process equipment which directly undergo the destructive consequences of contaminants that crude oils contain even after desalting and dehydration processes. A simple flow diagram of the system is shown in figure 1.

Corrosion in the system occurs when an electronic conductor (metal) and an ionic conductor (water

[1]The Unified Numbering System (UNS) was conceived and established by ASTM and SAE. It is an alpha-numeric code system whose designation starts with a letter followed by 5 digits and applies to any alloy. A distinctive UNS number is assigned to each alloy to specify its chemical composition [1].

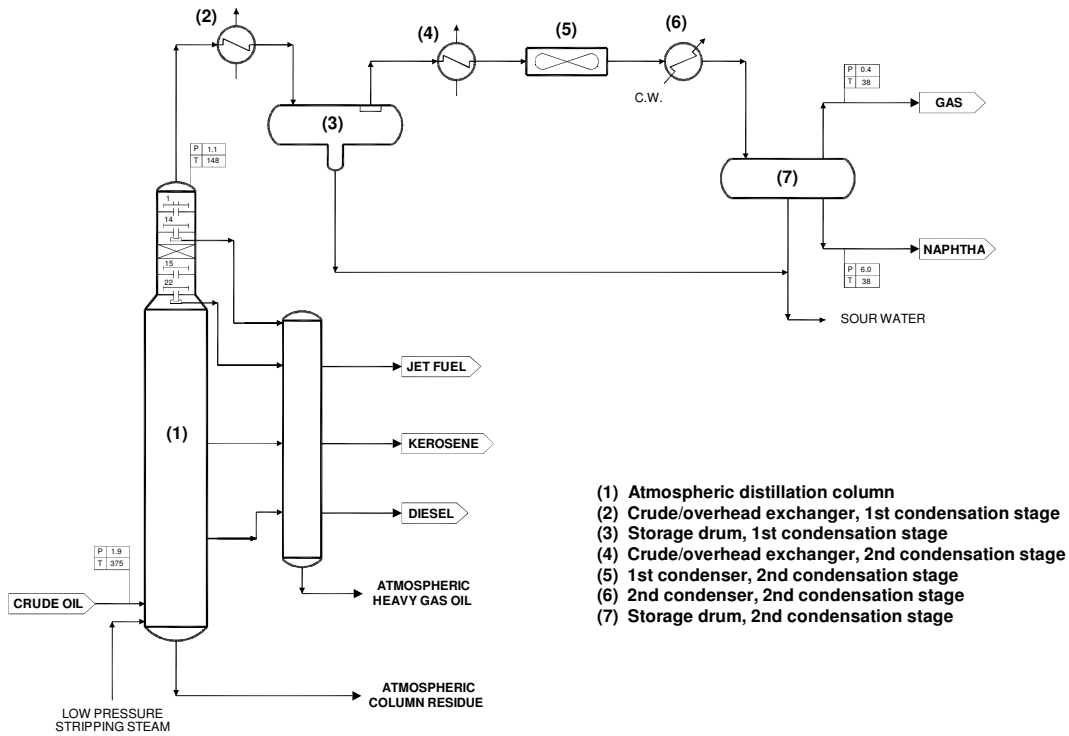

Figure 1. Typical flow diagram of atmospheric distillation column and two-stage condensation system

and dissolved salts) interact with each other. Water may come from three sources: in crude from oilfield (native water), stripping steam that condenses in low temperature regions of column upper section and condensation system, and wash water injected to the condensation system to sweep up ammonia chlorides. Dissolved salts are predominantly calcium and magnesium chlorides which were not removed during desalting. Crude oil is heated up to about 370 °C and then conveyed into the column. At this temperature, hydrochloric acid (HCl) is formed from the hydrolysis of $MgCl_2$ and $CaCl_2$ in the existing water (NaCl is less of a hazard since it is more stable and does not hydrolyze). HCl is the main strong acid responsible for corrosion in the system. In addition, hydrogen sulfide (H_2S) released from crude oils increase significantly corrosion damage of metals. Other contaminants such as napthenic acids and CO_2 are present in crude oils; however, HCl and H_2S are regarded as the major corrosive species in the system [2-14].

The corrosion problem described before has become more serious as there is a growing need in Mexico –and in other crude producing nations around the world- to refine heavier crudes. In general terms, heavier crudes have bigger amounts of dissolved salts, water and H_2S which are more difficult to be eliminated during refining processes. As a result, increased amounts of those substances in process streams will aggravate corrosion damage of metals in the system.

Many studies have been done so far to solve this corrosion problem. A revision of the references quoted above and others [15-20] unveiled that corrosion experiences have been informed when refining crudes extracted from different sites of the world and processed on special conditions. Nevertheless, no reports were found for crudes produced in Mexico under particular conditions of mexican refineries. Consequently, four commercially produced metals (titanium grade 2 having a purity of 99%, alloy 400, alloy 20 and alloy C-276) were electrochemically examined to determine their susceptibility to corrosion in distinct environments. Therefore, suggested solutions given here are entirely supported on proper laboratory experimentation.

Since corrosion is electrochemical in nature, corrosion processes in metals are adequately investigated using electrochemical techniques [21]. Linear Polarization (LP) in anodic direction was used in this work to perform laboratory experiments. This technique was employed to characterize corrosion processes for each metal-environment array in severe potential/current density conditions. It was especially utilized to examine the effects of variations in pH of environment as well as to search for associated activation potentials.

Molar concentrations of environments (i.e. electrolyte solutions) were obtained from results of previous research. The concentrations of main corrosive species used in laboratory work were 0.05 mol/L HCl and 0.05 mol/L HCl + 500 ppm H_2S. Experiments were carried out controlling parameters that have significant influence on corrosion phenomena such as pH and temperature of solution, as well as rotation speed, exposed area and surface finish of working electrodes. Other essential parameters are the potential sweep rate and the potential window from open circuit potential (OCP) specific to the application of LP technique.

The aim of this work is to offer a methodology –based on corrosion susceptibility of metals- to select materials of construction for atmospheric distillation units in the refining industry. In fact, the proposed methodology can be extended to solve corrosion problems for any metal-environment combination which may lead to a better materials selection.

This paper describes the results of the utilization of LP to investigate corrosion susceptibility of these metals that were tested at pH 1.5, 4, 6, 8 and 10 values. pH modification was accomplished by adding a neutralizing amine. Results of the study are given comparatively to emphasize variations in corrosion susceptibility of metals at various pH values of environments.

2. EXPERIMENTAL PART

To define concentrations of HCl and H_2S to be utilized in preparing laboratory electrolytes, an analysis was made to determine amounts of dissolved salts and water content for crude feed to the atmospheric distillation column in a refinery that processes a heavy-light crude blending typically produced in Mexico. From this determination, other higher and lower values were tried to identify precise concentrations of HCl and H_2S which caused both electrolytes to be the most corrosive [22-23]. The resulting molar concentrations were: 0.05 mol/L HCl and 0.05 mol/L HCl + 500 ppm H_2S.

Both electrolytes yielded natural pH values of approximately 1.5 and were subsequently adjusted to 4, 6, 8 and 10 by adding a neutralizing amine (monoethanolamine MEA). MEA is often employed

during normal plant operation to control pH of process streams in atmospheric distillation and other refining units.

In all electrochemical experiments, a conventional three-electrode cell was used with a saturated calomel reference electrode (SCE). All potential values are reported with respect to SCE. Counter electrode was a graphite bar. Reference and counter electrodes were arranged in separate compartments. Working electrodes were titanium grade 2, alloy 400, alloy 20 and alloy C-276 metal discs each embedded in a Teflon tube to allow for free rotation. Exposed area of working electrode was 0.5 cm^2. Electrode surface was cleaned by grinding using 600-grit water-cooled silicon carbide papers followed by a 5-minute soak in ultrapure deionized water. This cleaning process was repeated for the working electrode prior to each experiment to ensure clean and uniform surface. Chemical reagents were analytical grade dissolved in Millipore-Q ultrapure deionized water (Millipore-Q system; resistivity=18 MΩ). Experiments were performed using an Autolab model PGSTAT30 potentiostat/galvanostat. Perturbation, response and data processing were achieved by means of GPES software.

It has been widely reported that corrosion phenomena are altered by hydrodynamic flow conditions. The mass-transfer rate of reactant from the bulk to the metal surface depends on the hydrodynamic conditions and hence on the diffusion layer thickness. An increase in flow rate decreases the diffusion layer thickness and accelerates electrochemical reactions of species (particularly oxidants) on a metal surface [24-28]. Therefore, working electrodes were rotated at 2000 rpm constant speed during every experiment to attain two purposes: to control the diffusion layer thickness in the electrochemical interface and to reproduce flow conditions commonly found in equipment and pipelines of real-life systems. Likewise, since temperature has critical influence on corrosion processes in metals all experiments were carried out keeping temperature to 40 °C.

Because in anodic polarization metal dissolution is especially promoted, it was the fundamental method used in LP. Anodic polarization, i.e. system perturbation produced by scan potentials in the positive direction from OCP, was performed by applying a 1 mV/s sweep rate and +1000 mV potential window from OCP.

3. RESULTS AND DISCUSSION

Figure 2 illustrates linear sweep plots in the anodic direction as obtained by titanium grade 2, alloy 400, alloy 20 and alloy C-276 in 0.05 mol/L HCl + 500 ppm H_2S environment. Although other pHs were tested (4 and 8), for reasons of simplicity only pH 1.5, 6 and 10 are shown. Complete results for all metals in both 0.05 mol/L HCl and 0.05 mol/L HCl + 500 ppm H_2S environments are summarized in table 1.

Figure 2a shows that titanium has the lowest current density magnitudes (up to 5 $\mu A/cm^2$), which implies that this metal has the best performance of all four metals in terms of corrosion susceptibility in the environment. For pH 1.5, as system is perturbed by applying scan potentials in the positive direction from OCP ($E_{i=0}$ = -0.274 V), titanium displays an active initial behavior evidenced by growing current densities. Then, at nearly 0.314 V (E=+0.040 V vs. SCE) overpotential from OCP a

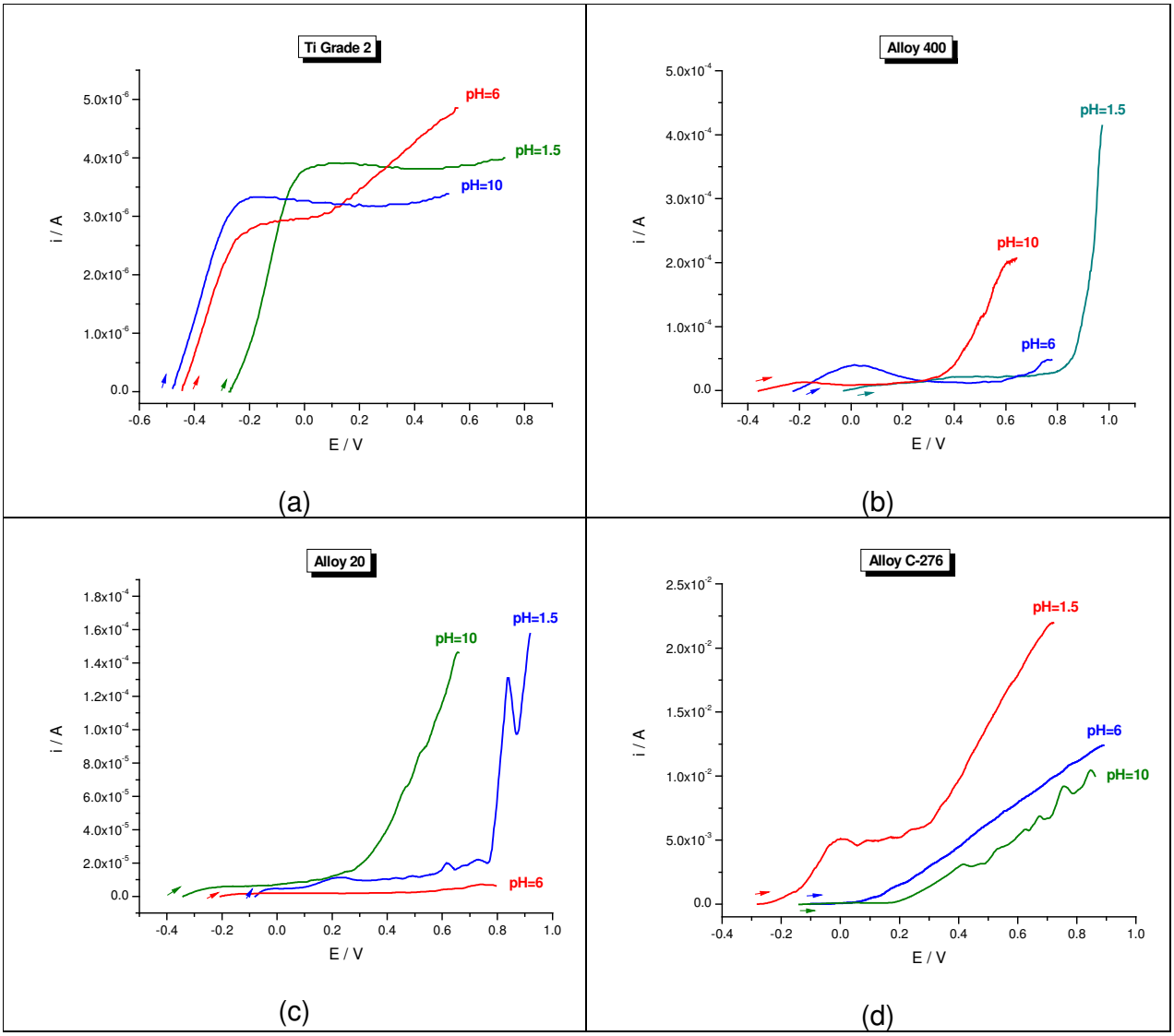

Figure 2 Anodic polarization plots of metals in 0.05 mol/L HCl + 500 ppm H_2S environment at different pH values. The pHs used are shown in the figure.

stationary response of the system occurs and a plateau in the current density of the system is observed. This plateau remains relatively constant up to the end of the plot and no activation potential, i.e. sudden significant increase of current density of the system was found. The noticed low current density in the system can be caused by the formation of a protective titanium oxide (TiO_2) layer on the metal surface. A comparable overall behavior is seen for pH 10 except that the plateau appears at about 0.279 V (E=-0.200 V vs. SCE) overpotential from OCP. For pH 6 the same behavior occurs initially at low overpotentials; later, at overpotential of approximately 0.537 V an activation potential (+0.092 V vs. SCE) takes place proved by a steady increase in current density. Note that except for overpotentials beyond the activation potential, current density magnitudes are the smallest in comparison with the rest

of pHs. From a practical point of view, this is an important fact to be emphasized since during operation of atmospheric distillation units pH of process streams is frequently controlled between 5.5 and 6.5 by adding a neutralizing amine (e.g. MEA). Such pH control then appears to be a proper field practice when operating process equipment constructed with titanium grade 2. Another fact to be underlined from figure is that OCP is shifted in the cathodic direction as pH of environment is increased. This may be caused by two specific factors: the concentration of electro-active species present in the environment and the metallurgical nature of metal.

From figure 2b, alloy 400 exhibits a relatively flat initial plateau in current densities for pH 1.5 and an activation potential is encountered nearly at 0.858 V (E=+0.830 V vs. SCE) overpotential from OCP. The stationary initial response of the system can be connected to a nickel oxide formed on the metal surface. For pH 6, an initial low mountain-like profile is present which may reveal that an oxidation process of an electro-active species on the metal surface arises –possibly the nickel oxidation process. Although a small increase in current density is observed at high overpotentials, this behavior can not be considered as an activation potential. For pH 10, a smooth initial plateau is observed and an activation potential becomes visible approximately at 0.703 V (E=+0.344 V vs. SCE) overpotential from OCP. Consequently, it can be stated that optimum or lowest corrosion susceptibility of alloy 400 in 0.05 mol/L HCl + 500 ppm H_2S environment is found at close-to-neutral pHs. Also, OCP in this case was shifted in the cathodic direction as pH of environment was raised. It is important to highlight that current densities found for alloy 400 are two orders in magnitude higher than those obtained for titanium grade 2.

Figure 2c shows that alloy 20 has a corrosion susceptibility behavior similar to the one described earlier for alloy 400 except that activation potentials for pH 1.5 and pH 10 are 0.842 V (E=+0.763 V vs. SCE) and 0.613 V (E=+0.271 V vs. SCE) overpotentials from OCP, respectively. For this alloy, stationary behavior may be produced by the formation of a superficial layer of a chromium or nickel oxide. Again, OCP values experienced shifts in the cathodic direction as pH of environment was increased. Concerning current densities, alloy 20 exhibited values one order in magnitude higher than those attained for titanium grade 2, and one order in magnitude lower than those acquired for alloy 400.

In figure 2d, it can be seen that alloy C-276 has the highest current density values (approximately up to 22.5 mA/cm^2) denoting that it has the greatest susceptibility to corrosion of all examined metals in 0.05 mol/L HCl + 500 ppm H_2S environment. For pH 1.5, an active response of the system is manifested and metal dissolves immediately as overpotentials are applied. For pH 6 and pH 10 an initial stationary behavior of metal occurs which can be related to the formation of a metallic oxide on the surface of alloy. Activation potentials for these pHs are 0.181 V (E=+0.071 V vs. SCE) and 0.303 V (E=+0.163 V vs. SCE) overpotentials from OCP, correspondingly. Contrary to what was encountered for the other inspected metals, OCP shift in this case takes place in the anodic direction as pH of environment is increased. It is worth to perceive that current densities for alloy C-276 are four orders in magnitude higher than those obtained for titanium grade 2.

From the results already discussed, it can be seen that MEA added to the HCl + H_2S solution affects corrosion processes of examined metals. This is more obvious for alloy C-276 since differences in current densities at individual pHs are relatively significant. Though such differences for titanium

are perceptible their magnitudes reveal that MEA has a slight effect on corrosion phenomenon. For alloys 400 and 20 the outcome seems more evident on the activation potentials as they occur at dissimilar overpotentials depending on the pH value of solution. Moreover, MEA causes the OCPs to be shifted in the cathodic/anodic direction for the four metals. Influences of MEA on the corrosion behavior of metals have been reported earlier on a number of investigations. An analysis focused on corrosion of a carbon steel in 0.05 mol/L HCl + 500 ppm H_2S solution at pH 2 manifested that various dosages of MEA added to the solution resulted in the acceleration of the corrosion process [29]. Another investigation based on metal weight loss determinations indicated that the corrosion rate of alloy 400 in MEA solution is altered by the use of amine-based compounds [30]. Furthermore, non-ferrous Cu-Ni 70-30 alloy was tested in MEA solutions at definite pH values under deaerated, aerated and H_2S conditions. LP measurements exhibited that corrosion rates were generally higher in solutions of pH 12 than at pH 9 [31].

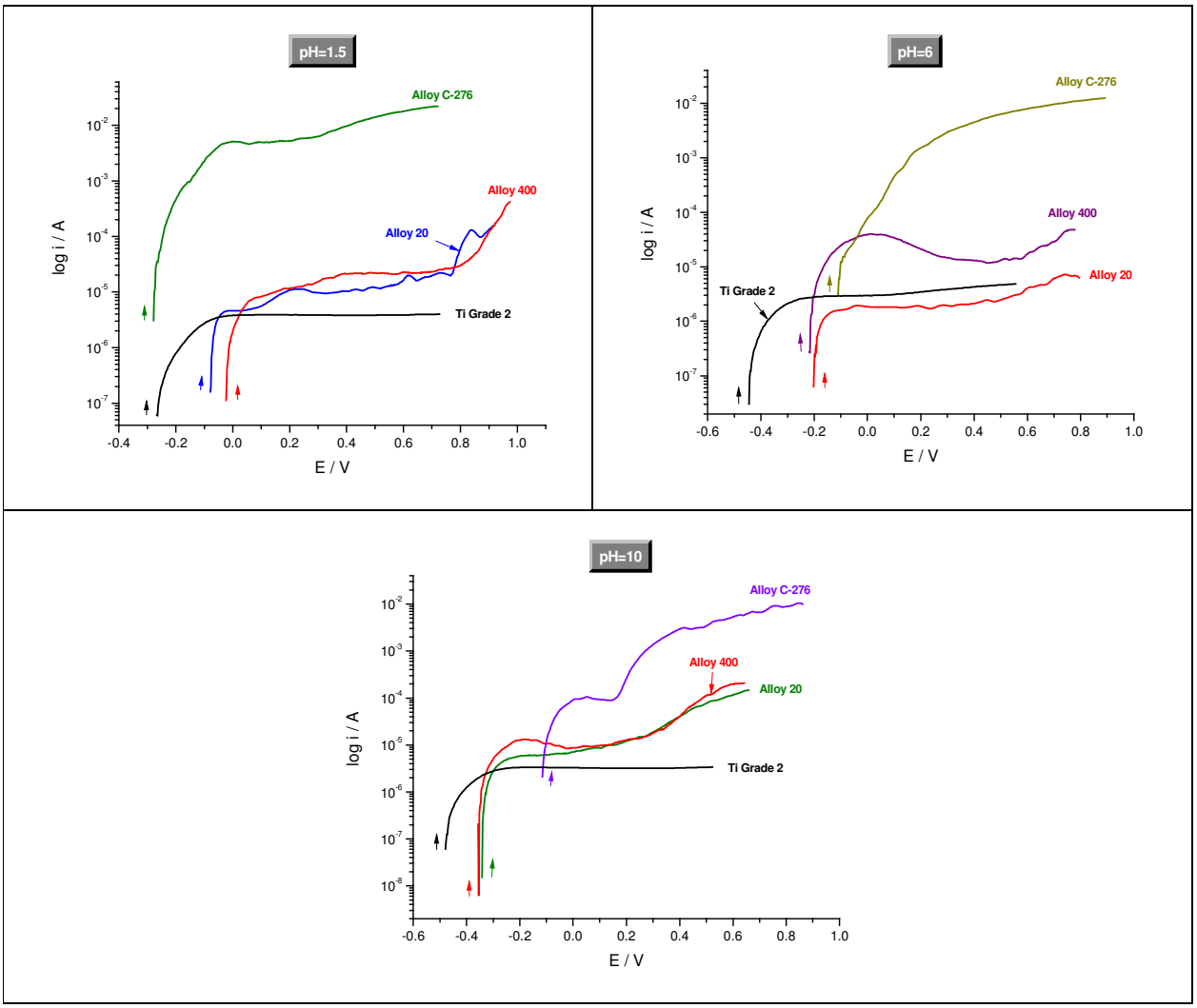

Figure 3. Anodic polarization plots of titanium and nickel-based alloys in 0.05 mol/L HCl + 500 ppm H_2S environment at pH values shown.

To compare metal susceptibility to corrosion in 0.05 mol/L HCl + 500 ppm H_2S environment at pH 1.5, 6 and 10 a logarithmic Y-axis (current density) is needed and thus several plots are shown in figure 3. For pH 1.5, titanium grade 2 shows the lowest current density magnitudes while alloy C-276 has the greatest. After an initial active performance (metal dissolution), titanium exhibits a noticeable stationary behavior evidenced by a plateau (this is also found for pH 6 and 10) in current densities. Alloy 20 and alloy 400 show similar behaviors featured by initial accelerated metal dissolution followed by moderate higher current densities which discloses that both alloys dissolve at higher rates as overpotential is increased; this is also true for pH 10. An important fact to be pointed out is that despite chemical composition and metallurgical microstructure is quite different for both alloys –alloy 20 is a Ni-Fe-Cr-Cu-Mo austenitic stainless steel while alloy 400 is a Ni-Cu solid solution binary alloy- their corrosion susceptibility can be regarded as equivalent for acid and alkaline conditions (pH 1.5 and pH 10) of 0.05 mol/L HCl + 500 ppm H_2S environment. However, for a close-to-neutral value (pH 6) corrosion susceptibility of titanium and alloy 20 are roughly the same while alloy 400 experiences greater current densities with no stationary behavior present. For the three pH values, alloy C-276 exhibited the highest current densities of all four metals which means that it corrodes very easily under the conditions shown.

Table 1. Electric charge linked to potential sweep in the anodic direction in 0.05 mol/L HCl and 0.05 mol/L HCl + 500 ppm H_2S environments (Coulombs x 10^{-3})

	pH 1.5	**pH 4**	**pH 6**	**pH 8**	**pH 10**
HCl					
Titanium grade 2	2.6	2.5	2.6	2.6	2.3
Alloy 400	7.8	7.1	14.6	8.9	38.3
Alloy 20	3.1	2.6	3.6	2.6	3.9
Alloy C-276	28,980	7,889	9,226	7,741	3,656
HCl + H_2S					
Titanium grade 2	3.3	2.6	3.1	2.7	2.9
Alloy 400	62.9	18.9	33.8	24.5	80.8
Alloy 20	107.2	13.1	3.7	35.6	48.6
Alloy C-276	13,860	7,255	9,711	10,400	7,259

In order to round out the previously mentioned LP study, corrosion susceptibility of metals was also assessed by determining electric charge –electron transfer rate- involved during corrosion processes. According to Faraday's Law,

$$i = \frac{dQ}{dt} = nF \cdot \frac{dN}{dt} \quad ,$$

electric charge can be directly associated to metal dissolution when overpotentials are applied in the positive or anodic direction to the corroding system. In this investigation, experiments were done for both HCl and HCl + H_2S environments at the pH values given. Table 1 summarizes the resulting electric charges.

Titanium grade 2 has the lowest electric charge values (2.3 up to 3.3 Coulombs x 10^{-3}) for all pHs in both environments. This is an indication that it dissolves very poorly as compared to other metals which confirms that titanium grade 2 offers the best corrosion resistance in both environments. Conversely, alloy C-276 has the greatest electric charges –ranging from 3,656 up to 28,980 Coulombs x 10^{-3}- which corroborates that it has the worst corrosion resistance of the four metals.

In all other cases, electric charges obtained in electrochemical experiments yielded intermediate values for which higher/lower susceptibilities to corrosion of metals in both environments were identified. In this way, it is relatively simple to recognize the effectiveness of electrochemical techniques in order to attain a comparative evaluation concerning corrosion susceptibility of diverse metals. This allows helping in the selection of construction materials not only for atmospheric distillation columns and overhead systems but for many other industrial applications.

4. CONCLUSIONS

An electrochemical technique was used successfully in this work to investigate corrosion susceptibility of different metals.

It was possible to detect that each metal has specific susceptibility to corrosion when exposed to the same conditions in characteristic environments typical of atmospheric distillation units.

The obtained results showed that every metal has dissimilar corrosion behavior depending on pH of environment (adjusted by MEA addition). Therefore, it was feasible to identify pH values for which each metal possesses the least corrosion susceptibility.

Understanding electrochemical interactions occurring during corrosion processes in each metal-environment combination could help in the design or modification of chemical treatments of plant streams to control corrosion.

Finally, the methodology offered here can be used as a useful tool to support materials selection, to improve corrosion control and to support decision-making in the operation of actual atmospheric distillation units.

ACKNOWLEDGEMENTS
J. Mendoza wishes to thank the Dirección de Investigación y Posgrado of the Instituto Mexicano del Petróleo for scholarship granted in working for the related research project.

References

1. FastPack, "Nomenclatura de aceros", www.fastpack.cl
2. B.G. Borgard, S.A. Bieber, J.B. Harrell, *Corrosion*/93, Paper # 633, NACE, Houston, Texas, 1993.
3. W.M. Cox, W.Y. Mok, R.G. Miller, *Corrosion* /90, Paper # 200, NACE, Houston, Texas, 1990.
4. J.G. Edmonson, S.E. Lehrer, *Corrosion* /94, Paper # 514, NACE, Houston, Texas, 1994.
5. P. Fearnside, R.B. Lessard, D.L. Stonecipher, *Corrosion* /94, Paper # 516, NACE, Houston, Texas, 1994.
6. E.C. French, W.F. Fahey, *Materials Performance*, 22(9)(1983)9.
7. E.C. French, W.F. Fahey, *Oil Gas Journal*, 77(22)(1979)67.
8. R.H. Hausler, N.D.Coble, *Hydrocarbon Processing*, 51(5)(1972)108.
9. W.A. Lindley, R.C. Strong, *Oil & Gas Journal*, 84(24)(1986)112.
10. R.D. Merrick, T. Auerbach, *Materials Performance*, 22(9)(1983)15.
11. J.R. Rue, D.P. Naeger, *Corrosion* /90, Paper # 211, NACE, Houston, Texas, 1990.
12. J.R. Rue, D.P. Naeger, *Corrosion* /87, Paper # 199, NACE, Houston, Texas, 1987.
13. S. Sandvik, "The role of duplex stainless steels in oil refinery heat exchanger", document No. S-1541-ENG, October 1997, www.steel.sandvik.com
14. H.U. Schutt, R.J. Horvath, *Corrosion* /87, Paper # 198, NACE, Houston, Texas, 1987.
15. G.N. Kirby, 29th biennial report on Materials of Construction, Chemical Engineering, November 3, 1980.
16. N.P. Leberman, *Oil & Gas Journal*, 91(1993)47
17. J.T. Powell, T. James, M.M. Mansouri, *Oil & Gas Journal*, 87(12)(1989)60.
18. H.U. Schutt, P.R. Rhodes, *Corrosion* 52(1996)947.
19. Q. J. M. Slaiman., H.J. Nassouri, *Materials Performance*, 23(8)(1984)38.
20. R.A. White, "Materials selection for petroleum refineries and gathering facilities", NACE International, Houston, Texas, 1998.
21. J. O'M. Bockris, R. Amulya, "Modern Electrochemistry-Volume 2B", 2nd Edition, Kluwer Academic/Plenum Publishers, New York, (2000)1637-1788.
22. L. Quej-Aké, M. Lozano-Rodríguez, G. Hernández-García, J. Marín-Cruz, *Proceedings of the XX SMEQ Meeting*, Puente de Ixtla, Morelos, México, May 22-27, 2005.
23. L. Quej-Aké, R. Cabrera-Sierra, J. Marín-Cruz, *Proceedings of the 210 Joint International Meeting of the Electrochemical Society*, Cancún, Quintana Roo, México, October 29-November 3, 2006.
24. Y.J. Kim, P.L. Andresen, *Corrosion*, 59(2003)584.
25. D.D. MacDonald, *Corrosion* 48(1992)194.
26. C.C. Lin, Y.J. Kim, L.W. Niedrach, K.S. Ramp, *Corrosion* 52(1996)618.
27. C.C. Lin, F.R. Smith, N. Ichikawa, M. Itow, *Corrosion* 48(1992)16.
28. Kaesche Helmut, Springer-Verlag Berlin Heidelberg, New York, 2003, pp. 204-285.
29. L. Quej-Aké, R. Cabrera-Sierra, E. Arce-Estrada, J. Marín-Cruz, *International Journal of Electrochemical Science*, 3(2008)56.
30. A. Al-Hashem, J.A. Carew, A. Hasan, *British Corrosion Journal*, 34(1999)310
31. H.M. Shalaby, A. Husain, A.A. Hasan, A.Y. Abdullah, *Corrosion Engineering Science and Technology*, 42(2007)64

© 2008 by ESG (www.electrochemsci.org)